Rezistenta spiralata
3 x 3 mm, patrat

Coil Heater
3 x 3 mm, squared

S5136/ . . . (WRP 25)

Specificatii tehnice:

Material:	CrNi-Otel
Lungime totala:	340 - 1400 mm (in stare dreapta)
Lungime incalzita:	250 - 1310 mm (in stare dreapta)
Zona neincalzita:	65 mm, + capat conectare: 25 mm
Tensiune:	230 V
Putere:	195 - 950 W

- disponibil cu sau fara termocuplu (Fe-CuNi)

Modele spirale:
- Lungimi 20-200 mm
- Diametru interior: 8 - 50 mm

Technical specifications:

Material:	CrNi-Steel
Total length:	340 - 1400 mm (straight)
Heated length:	250 - 1310 mm (straight)
Unheated zone:	65 mm, + connection head: 25 mm
Voltage:	230 V
Wattage:	195 - 950 W

- available with or without thermocouple (Fe-CuNi)

Coiled design:
- Length 20 - 200 mm
- Internal diameter: 8 - 50 mm

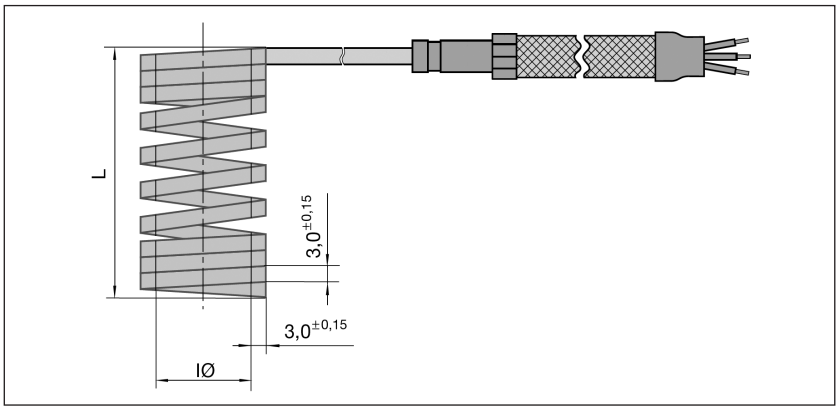

Puteri si dimensiuni disponibile in stoc:

Possible wattage and dimensions coiled out of stock heaters:

IØ [mm]:	**20**	**40**	**60**	**80**	**100**	**120**	**140**	**160**	**180**	**200**	**L [mm]**
10		215	325	325	325	470	470	610	610	630	
12		215	325	470	470	470	610	610	630	630	
12,5		215	325	470	470	470	610	610	630		
14		215	470	470	470	610	610	630			
15		325	470	610	610	610	630	630			
16		325	470	610	610	610	630	630			
18	215	325	610	610	610	630					
20	215	325	610	630	630	630					
22	215	325	610	630	630						
24	215	470	630								
25 (1“)	215	470	630								
28	325	470	630								
30	325	470									
35	325	610									
38	470	610									
40	470	630									
45	470	630									
50 (2“)	470								Putere / Wattage		

Rezistenta spiralata
3 x 3 mm, patrat

Coil Heater
3 x 3 mm, squared

S5136/ . . . (WRP 25)

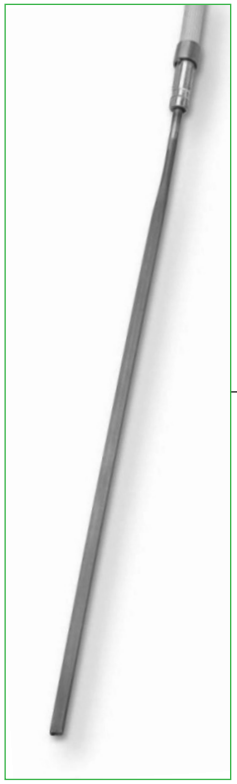

Tipul spiralei
Type of coiling

A1

in stare dreapta
uncoiled

A2

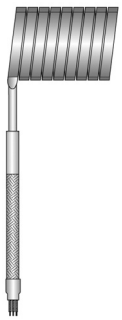

Spiralare bloc
Block coiling

A3

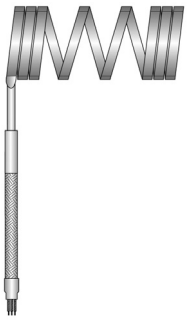

Spiralare logaritmica
Logarithmic coiling

Teaca
Jacket

B1

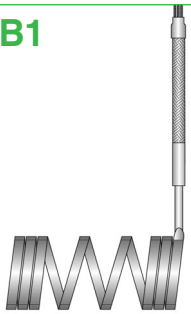

fara
without

B2

Tub de reflexie
Reflection tube

B3

Banda de retinere
Strap retainer

B4

Turnata in alama
Brass casted

Rezistenta spiralata, 3 x 3 mm, patrat

Coil Heater, 3 x 3 mm, squared

Tipuri de iesiri
Exit variations

C1

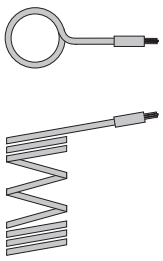

radial

C2

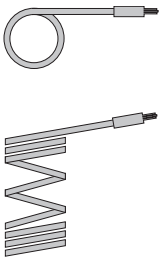

tangential

C3

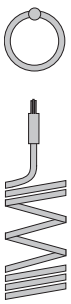

axial

Tipuri de cabluri
si optiuni de conectare

Lead types
and connection options

D2

Capat comun
cu conductor de impamantare (tip N)

Common head
with ground conductor (Type N)

D3

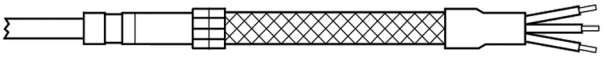

Capat comun cu conductor de impamantare
si manson GLS (Tip NG)

Common head with ground conductor
and GLS-sleeve(Type NG)

D4

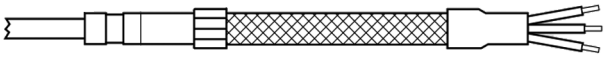

Capat comun cu conductor de impamantare
si manson metalic impletit (Tip ND)

Common head with ground conductor
and metal braided sleeve(Type ND)

D5

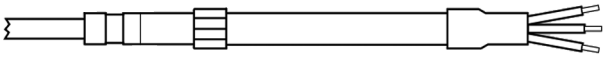

Capat comun cu conductor de impamantare
si manson PTFE (Tip NT)

Common head with ground conductor
and PTFE-sleeve (Type NT)

D6

Cablu izolat PTFE,
cu manson metalic flexibil

PTFE-insulated lead with
flexible metal sleeve

D7

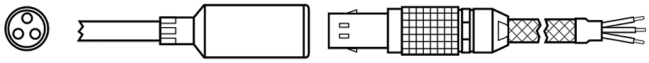

Conector priza 3 poli

3 pole plug connector

D8

Conector priza 5 poli

5 pole plug connector

Rezistenta spiralata, 3 x 3 mm, patrat

LA CEREREA CLIENTULUI

Coil Heater, 3 x 3 mm, squared

CUSTOM MADE

Formular comanda	Order form

Firma/Company _____

Persoana contact/Contact _____

Tel.: _____ Fax: _____ Data/Date: _____

☐ Comanda/Order Nr./No.: _____ ☐ Cerere oferta/Quotation

Specificatii comanda:

n: Cantitatea
Nr.: **S5136**

IØ: Diametru interior-Ø (**8 - 50 mm**)
L: Lungime spirala (**20 - 200 mm**)
A: Tipul spiralei (**3.20 A1-3**)
B: Teaca (**3.20 B1-4**)
C: Tipuri de iesiri (**3.21 C1-3**)
D: Optiuni de conectare (**3.21 D2-8**)
T: cu termocuplu (**1**)
fara termocuplu (**2**)

Order specifications:

n: Quantity
No.: **S5136**

IØ: Internal-Ø (**8 - 50 mm**)
L: Coiled length (**20 - 200 mm**)
A: Type of coiling (**3.20 A1-3**)
B: Jacket (**3.20 B1-4**)
C: Exit variations (**3.21 C1-3**)
D: Connection options (**3.21 D2-8**)
T: with thermocouple (**1**)
without thermocouple (**2**)

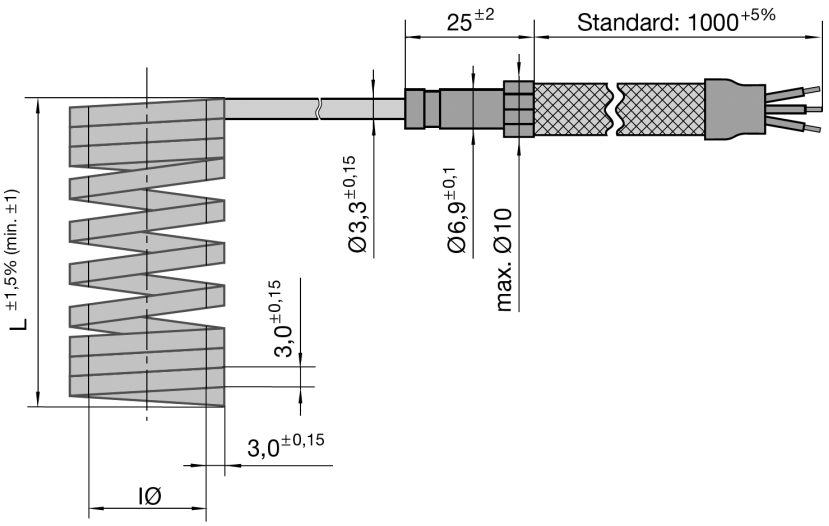

Alte dimensiuni pentru rezistentele spiralate se pot furniza la cerere.

Other designs of coil heaters can be supplied on request.

n	Nr. / No.	IØ [mm]	L [mm]	A	B	C	D	T
	S5136 /	x	x	x	x	x	x	
	S5136 /	x	x	x	x	x	x	
	S5136 /	x	x	x	x	x	x	
	S5136 /	x	x	x	x	x	x	
	S5136 /	x	x	x	x	x	x	