Conector industrial multipin 24 -pini (16A)

Multipole connector 24 -pole (16A)

Tip/Type CIM 24

Carcasa

- 24x16A (24P+E)
- Grad de protectie IP 65
- 380-415V / 50-60 Hz

- Inel de fixare (presetupa): PG 21

Hood

- 24x16A (24P+E)
- Degree of protection IP 65
- 380-415V / 50-60 Hz

- Fixing ring: PG 21

Tip/Type SIM 24

Soclu

- 24x16A (24P+E)
- Grad de protectie IP 65
- 380-415V / 50-60 Hz

Plug

- 24x16A (24P+E)
- Degree of protection IP 65
- 380-415V / 50-60 Hz

Tip/Type IT 24

Insertie tata

- 24x16A (24P+E)
- Grad de protectie IP 65
- 380-415V / 50-60 Hz

Male insert

- 24x16A (24P+E)
- Degree of protection IP 65
- 380-415V / 50-60 Hz

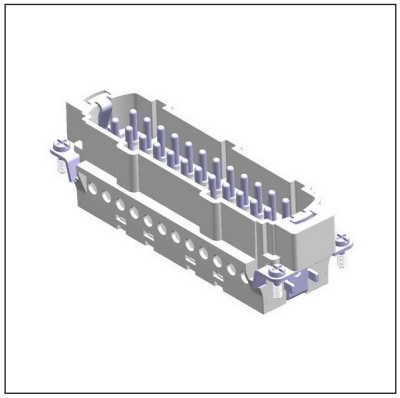

Tip/Type IM 24

Insertie mama

- 24x16A (24P+E)
- Grad de protectie IP 65
- 380-415V / 50-60 Hz

Female insert
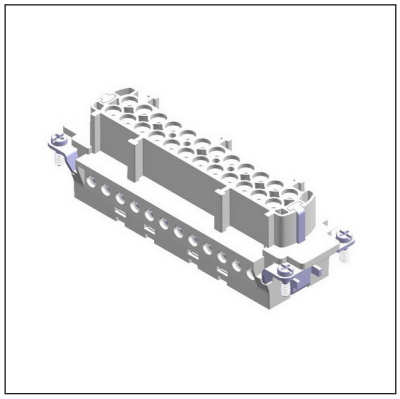
- 24x16A (24P+E)
- Degree of protection IP 65
- 380-415V / 50-60 Hz