Dispozitiv pneumatic de cuplare a aruncatoarelor

INFO

Pneumatic Ejector Coupling Device

INFO

S6110/ . . . (Pn 1680 ...)

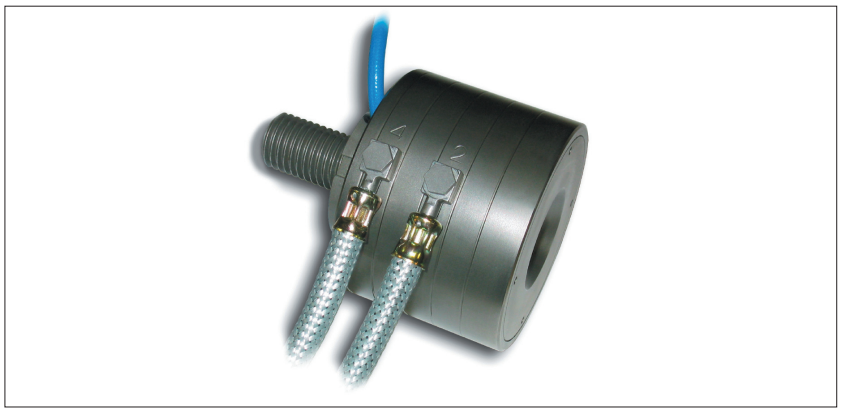

Caracteristici:

- Economie de timp la schimbarea matritelor.
- Siguranta mare la conectare prin intermediul comutatorului amplasat in afara.
- Blocare cu arc mecanic, care garanteaza o functie de blocare 100% la un eventual intrerupere de aer.
- Zona mare de blocare intre segmentul de blocare si tija, face ca acest cuplaj sa fie cea mai puternica de pe piata.
- Centrare automata prin conectarea parti mobile a masinii (Cuplajul poate fi de asemenea rotit in pozitia dorita).
- Conectarea este libera de la jocurile axiale si radiale intre tija si cuplaj.
- Neconcordantele radiale (H) pot fi compensate.
- Toate tijele sunt furnizate cu un indice de canelura (L1), care arata ca tija este in pozitia conectata.
- Poate fi livrat cu un comutator inductiv.

Characteristics:

- Time saving when changing moulds.
- High safety of the connection through the outside placed control switch.
- Mechanical spring locking that also guarantees 100% locking function at an eventual air failure.
- The large locking area between the locking segments and the pin makes this coupling the strongest on the market.
- Automatic centering by the moveable machine connection part (The coupling can also be turned into desired position).
- The connection is free from axial and radial play between pin and coupling.
- Radial mismatch (H) can be compensated for.
- All pins are supplied with an indicating groove (L1) that shows that the pin is in its connetion position.
- Can be delivered with an inductive switch.

Montare:

Insurubati filetul D3 cu LOCTITE si strangeti contra flansei A folosind o cheie tip carlig. (L3 poate fi scurtat in cazul in care este necesar). Fixati furtunurile in ordinea numerica corecta 2 resp. 4. Cuplarea poate fi de asemenea utilizat cu un furtun conectat la nr.2, fie cu sau fara valva.

Assembly:

Screw in thread D3 with LOCTITE and pull tight against flunge A using a hook wrench (L3 can be shortened if necessary). Fit the hoses in the correct numerical order, 2 alt. 4. The coupling can also be used with one hose, connected to nr. 2, either with or without a valve.

Atentie:

Cuplarea nu trebuie sa fie inchisa inainte ca tija aruncatorului sa fi atins pozitia in care atinge suprafata B in totalitate. (Segmentele nu sunt controlate pozitiv.)

Note:

The coupling should not be closed before the ejector pin has reached its bottom position against surface B in full. (The segments are not positively controlled.)

DELORTECH - Sisteme de incalziri si raciri industriale - Industrial heating and cooling systems
Aleea Ciocarliei nr. 3/14, 530164 Miercurea Ciuc, HR/RO +40-745-915 912, +40-755-086 086 +40-266-317 243 info@delortech.ro www.delortech.ro

Dispozitiv pneumatic de cuplare a aruncatoarelor

Pneumatic Ejector Coupling Device

S6110/ . . . (Pn 1680 ...)

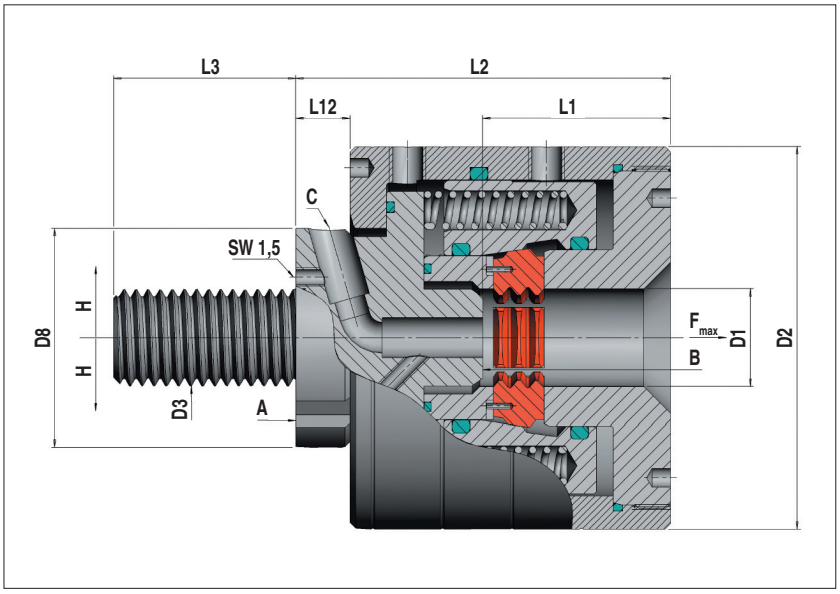

D1	D2	D3	D8	L1	L2	L3	H*	F_{max} [kN]	Nr. / No.
16	63	**M12**	36	31	62	25	1,25	40	**S6110/ 16 x M12**
		M16				30			**M16**
20	75	**M16**	41	37	70		1,5	80	**S6110/ 20 x M16**
		M20				35			**M20**
30	93	**M20**	56	45	80			120	**S6110/ 30 x M20**
		M24				40			**M24**
40	120	**M30**	71	59	105	45	2	200	**S6110/ 40 x M30**
		M36				50			**M36**

* = neconcordanta max. * = max. mismatch

Tija aruncator cu filet

Pentru dispozitiv pneumatic de cuplare a aruncatoarelor

Ejector Rod with thread

For Pneumatic Ejector Coupling Device

S6111/ . . . (Pn 1681 ...)

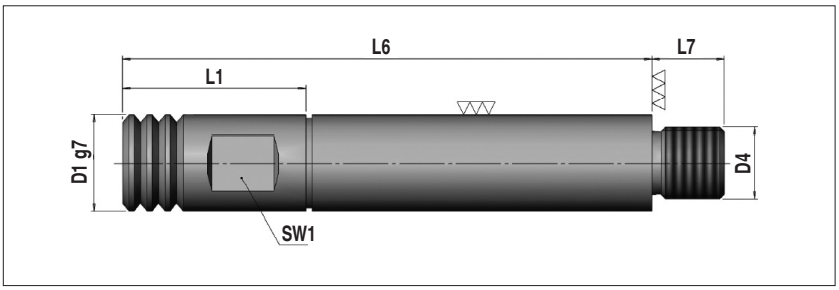

D1	D4	L1	L6	L7	SW1	Nr. / No.
16	M12x1	31	**100**	12	13	**S6111/ 16 x 100**
			125			**125**
20		37	**115**		14	**S6111/ 20 x 115**
			140			**140**
30	M16x1,5	45	**140**	22	22	**S6111/ 30 x 140**
			170			**170**
40	M20x1,5	59	**175**	27	30	**S6111/ 40 x 175**
			220			**220**